Specification available from: Österreichischer Verband für Elektrotechnik (OVE) Eschenbachgasse 9 A-1010 VIENNA	IEC 60738-1-1 – AT0001 Issue 11 / 2020/12 QC 440001 AT0001
Electronic Components of assessed quality in accordance with: IEC 60738-1: 2009-07	IEC 60738-1-1: 2008-02 QC 440001
	Directly heated positive step-function temperature coefficient thermistors for current limiting application. Overload protector PTC Thermistors
Assessment level: EZ	Modified ferro-electric ceramic material PTC disk with terminations

Outline drawings:

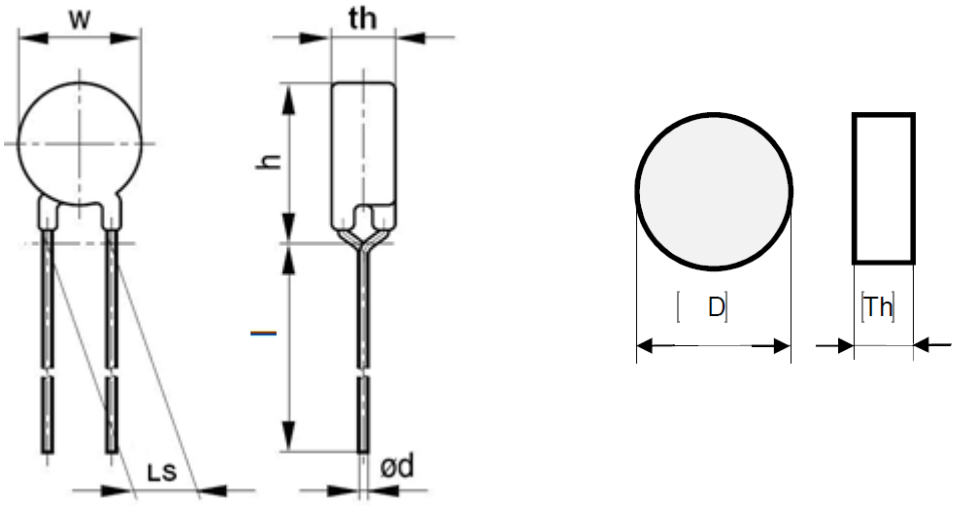

Information on the availability of components qualified to this detail specification is given in the Register of Approvals

1 General data

1.1 Method of mounting

Leaded Thermistors are gripped and connected by clips at 20 - 25mm from the body.
B59160A*140A 10 is contacted by clamps

1.2 Dimensions

Layout coated/uncoated version:

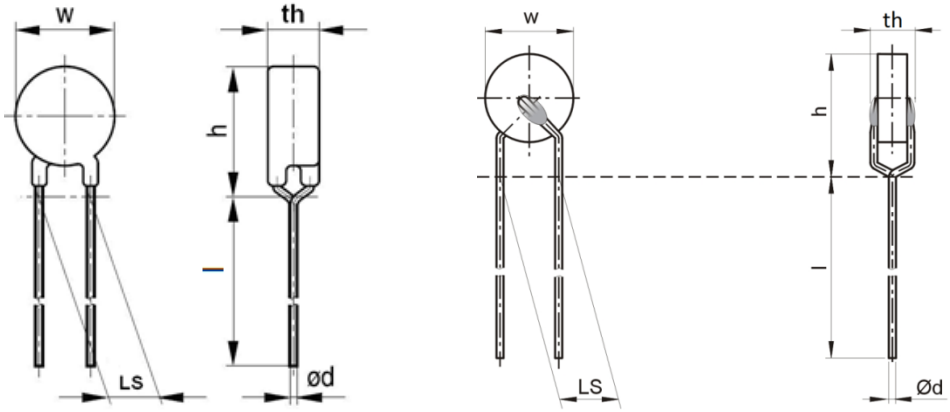

Data for the parameters w_{max}, th_{max}, h_{max} and Ød: see tables 1-15
The lead length is valid only for bulk packed components, for taped components IEC 60286-2 applies

Drawing B59160A 140A 10

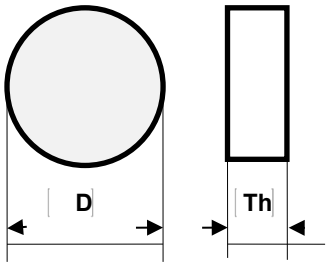

Data for the parameters D, Th: see table 16

1.3 Coating

PTC thermistors are coated with nonisolating lacquer.
B-types are not coated.
B59160A*140A 10 is in uncoated version only

Material: Silicone lacquer
Ref. No.: “OHMCOAT AF”, Type 490-(+)
Supplier: Yantai Namics Electronic Materials Co., Ltd

Alternative Material: Silicone lacquer
Ref. No.: Hydro-Tauchlack HHF Blau
Supplier: Akzo Nobel Coatings, GmbH

Alternative Material: Silicone lacquer
Ref. No.: REM-AQUA 415
Supplier: Rembrandtin Lack, GmbH

1.4 Terminations

The terminations are suitable for soldering.
Ag electrodes of B59160A*140 A 10 are only for clamp contacting (not solderable)

1.5 Flammability

Not specified.

1.6 Resistance to solvents

The coating of the thermistors is resistant to solvents like propyl alcohol, toluol or ethanol.

1.7 Packaging

PTC thermistors are taped according to IEC 60286-2 or bulk packed.
B59160A*140A*10 is packaged in plastic deep drawing trays.

1.8 Electrical data/ratings and characteristics

Upper/lower category temperatures (V = 0) (UCT/LCT): -40°C / 125°C

Operating temperature range at V_{max}: T_{op_min}/T_{op_max}. According 1.11.

Maximum voltage (V_{max})

Nominal zero-power resistance (R_{25})

Tripping current (I_t)

Max. switching time at I_t (t_s): 600s

Maximum non-tripping current (I_{nt}), measurement of PTC-voltage after 10 min

Maximum residual current at V_{max} (I_{res}), measured 3 min after tripping

Maximum overload current (I_{max})

Switching temperature (T_b) for information only

For corresponding ratings see tables 1 –16; in the type designation y is the code for coating:
y = B for not coated types, y = C for coated types, y = A is for uncoated and unleaded disc

The tolerance for the nominal zero-power resistance is ΔR_{25} = ± 25%., excepting:

1. Customer specific types: Tolerance for the nominal zero-power resistance according Appendix.
2. y830-y880, y930-y980, T_b=130°C: Tolerance for the nominal zero-power resistance ΔR_{25} = ± 20%.
3. B59160A*140A*10: Tolerance for the nominal zero-power resistance ΔR_{25} = ± 20%

1.9 Related documents

Generic specification

IEC 60738-1: 2009-07, thermistors – directly heated positive step-function temperature coefficient – Part 1: Generic specification

1.10 Marking

The type designation is stamped on coated thermistors.

B59160A*140A*10 has no marking

On the packing of all shipped thermistors there will be a bar code label stating type, part number, quantity, date of manufacture and lot number.

1.11 Ordering information

Ordering code: B59xxxX*YYYyzzz+

B59xxxX	Type designation	B59… PTC Thermistor xxx… type family code X… B (uncoated), C (coated), A (uncoated unleaded disc)
*	Supplement digit type designation (optional)	“0”, or omitted.
YYY	Switching temperature	T_{sw} [°C]
y	Version: Standard/Customer	A (standard type), B (customer specific type)
zzz	Packing /Customer specifc informations	Code for packing type and in case of B-types customer specifc information not effecting IECQ specifications. Except: 5zz types are Pb-free versions.
+	Processing information/ Customer specific informations/ (optional)	Can be followed by additional numbers and letters (3 digits) not effecting IEC specifications (processing).

Note: Only those materials are considered certified, where the product specifications are complianent with the ratings and requirements of this Detail Specification.

Table 1:
V_{max} = 20V, T_b = 160°C, th_{max} = 3,5mm

Material number	R_{25}	I_t	I_{nt}	I_{res}	I_{max}	h_{max}	w_{max}	Ød[1)]	Topmin/Topmax
	[Ω]	[mA]	[mA]	[mA]	[A]	[mm]	[mm]	[mm]	°C
B59945B*160yzzz+	0,45	3050	1500	340	8,0	21,0	17,5	0,6	-40/85
B59955B*160yzzz+	0,8	1900	950	240	5,5	17,0	13,5	0,6	-40/85
B59965B*160yzzz+	1,2	1450	700	210	4,3	14,5	11,0	0,6	-40/85
B59975B*160yzzz+	1,8	1100	550	170	3,0	12,5	9,0	0,6	-40/85
B59985x*160yzzz+	4,6	600	300	130	1,0	10,0	6,5	0,6	-40/85
B59995x*160yzzz+	13	300	150	80	0,7	7,5	4,0	0,5	-40/85

[1)] Tolerance ±0,05mm

Table 2:
V_{max} = 30V, T_b = 120°C, th_{max} = 3,5mm

Material number	R_{25}	I_t	I_{nt}	I_{res}	I_{max}	h_{max}	w_{max}	Ød[1)]	Topmin/Topmax
	[Ω]	[mA]	[mA]	[mA]	[A]	[mm]	[mm]	[mm]	°C
B59945B*120yzzz+	0,45	2600	1300	230	8,0	21,0	17,5	0,6	-40/85
B59955B*120yzzz+	0,8	1700	850	160	5,5	17,0	13,5	0,6	-40/85
B59965B*120yzzz+	1,2	1200	600	140	4,3	14,5	11,0	0,6	-40/85
B59975B*120yzzz+	1,8	900	450	120	3,0	12,5	9,0	0,6	-40/85
B59985B*120yzzz+	4,6	500	250	90	1,0	10,0	6,5	0,6	-40/85
B59995B*120yzzz+	13	240	120	50	0,7	7,5	4,0	0,5	-40/85

[1)] Tolerance ±0,05mm

Table 3:
V_{max} = 54V, T_b = 160°C, th_{max} = 3,5mm

Material number	R_{25}	I_t	I_{nt}	I_{res}	I_{max}	h_{max}	w_{max}	Ød[1)]	Topmin/Topmax
	[Ω]	[mA]	[mA]	[mA]	[A]	[mm]	[mm]	[mm]	°C
B59940B*160yzzz+	2,3	1140	550	100	8,0	21,0	17,5	0,6	0/60
B59950B*160yzzz+	3,7	730	360	70	5,5	17,0	13,5	0,6	0/60
B59960B*160yzzz+	5,6	560	280	60	4,3	14,5	11,0	0,6	0/60
B59970B*160yzzz+	9,4	355	170	50	3,0	12,5	9,0	0,6	0/60
B59980x*160yzzz+	25	200	95	40	1,0	10,0	6,5	0,6	0/60
B59990x*160yzzz+	55	120	55	30	0,7	7,5	4,0	0,5	0/60

[1)] Tolerance ±0,05mm

Table 4:
V_{max} = 80V, T_b = 80°C, th_{max} = 3,5mm

Material number	R_{25}	I_t	I_{nt}	I_{res}	I_{max}	h_{max}	w_{max}	Ød[1)]	Topmin/Topmax
	[Ω]	[mA]	[mA]	[mA]	[A]	[mm]	[mm]	[mm]	°C
B59940x**80yzzz+	2,3	500	245	50	8,0	21,0	17,5	0,6	-40/85
B59950x**80yzzz+	3,7	350	170	40	5,5	17,0	13,5	0,6	-40/85
B59960x**80yzzz+	5,6	265	130	30	4,3	14,5	11,0	0,6	-40/85
B59970x**80yzzz+	9,4	190	90	22	3,0	12,5	9,0	0,6	-40/85
B59980x**80yzzz+	25	110	50	16	1,0	10,0	6,5	0,6	-40/85
B59990x**80yzzz+	55	60	30	10	0,7	7,5	4,0	0,5	-40/85

[1)] Tolerance ±0,05mm

Table 5:
V_{max} = 80V, T_b = 120°C, th_{max} = 3,5mm

Material number	R_{25}	I_t	I_{nt}	I_{res}	I_{max}	h_{max}	w_{max}	Ød[1)]	Topmin/Topmax
	[Ω]	[mA]	[mA]	[mA]	[A]	[mm]	[mm]	[mm]	°C
B59940B*120yzzz+	2,3	900	450	80	8,0	21,0	17,5	0,6	-40/125
B59950B*120yzzz+	3,7	640	320	60	5,5	17,0	13,5	0,6	-40/125
B59960B*120yzzz+	5,6	500	250	50	4,3	14,5	11,0	0,6	-40/125
B59970B*120yzzz+	9,4	300	150	40	3,0	12,5	9,0	0,6	-40/125
B59980B*120yzzz+	25	170	85	32	1,0	10,0	6,5	0,6	-40/125
B59990B*120yzzz+	55	100	50	24	0,7	7,5	4,0	0,5	-40/125

[1)] Tolerance ±0,05mm

Table 6:
V_{max} = 80V, T_b = 130°C, th_{max} = 3,5mm

Material number	R_{25}	I_t	I_{nt}	I_{res}	I_{max}	h_{max}	w_{max}	Ød[1)]	Topmin/Topmax
	[Ω]	[mA]	[mA]	[mA]	[A]	[mm]	[mm]	[mm]	°C
B59930B*130yzzz+	2,2	1100	700	100	8,0	21,0	17,5	0,8	-40/125
B59940B*130yzzz+	3,3	690	450	60	5,5	17,0	13,5	0,6	-40/125
B59950B*130yzzz+	4,9	500	320	50	4,3	14,5	11,0	0,6	-40/125
B59960B*130yzzz+	8,0	380	250	40	3,0	12,5	9,0	0,6	-40/125
B59970x*130yzzz+	20,0	240	150	36	1,0	10,0	6,5	0,6	-40/125
B59980x*130yzzz+	62,0	130	85	30	0,7	7,5	4,0	0,6	-40/125

[1)] Tolerance ±0,05mm

Table 7:
V_{max} = 160V, T_b = 160°C, th_{max} = 5,0mm

Material number	R_{25}	I_t	I_{nt}	I_{res}	I_{max}	h_{max}	w_{max}	Ød[1)]	Topmin/Topmax
	[Ω]	[mA]	[mA]	[mA]	[A]	[mm]	[mm]	[mm]	°C
B59840B*160yzzz+	6,0	800	400	36	4,1	21,0	17,5	0,6	0/60
B59850B*160yzzz+	10	500	250	32	2,2	17,0	13,5	0,6	0/60
B59860B*160yzzz+	15	360	180	26	1,5	14,5	11,0	0,6	0/60
B59870B*160yzzz+	25	250	125	22	1,0	12,5	9,0	0,6	0/60
B59880x*160yzzz+	70	140	70	16	0,4	10,0	6,5	0,6	0/60
B59890x*160yzzz+	150	70	35	12	0,2	7,5	4,0	0,5	0/60

[1)] Tolerance ±0,05mm

Table 8:
V_{max} = 265V, T_b = 80°C, th_{max} = 5,0mm

Material number	R_{25}	I_t	I_{nt}	I_{res}	I_{max}	h_{max}	w_{max}	Ød[1)]	Topmin/Topmax
	[Ω]	[mA]	[mA]	[mA]	[A]	[mm]	[mm]	[mm]	°C
B59840x**80yzzz+	6,0	350	170	20	4,1	21,0	17,5	0,6	0/60
B59850x**80yzzz+	10	230	110	16	2,2	17,0	13,5	0,6	0/60
B59860x**80yzzz+	15	180	90	12	1,5	14,5	11,0	0,6	0/60
B59870x**80yzzz+	25	130	60	10	1,0	12,5	9,0	0,6	0/60
B59880x**80yzzz+	70	70	30	8	0,4	10,0	6,5	0,6	0/60
B59890x**80yzzz+	150	40	15	6	0,2	7,5	4,0	0,5	0/60

[1)] Tolerance ±0,05mm

Table 9:
V_{max} = 265V, T_b = 120°C, th_{max} = 5,0mm

Material number	R_{25}	I_t	I_{nt}	I_{res}	I_{max}	h_{max}	w_{max}	Ød[1)]	Topmin/Topmax
	[Ω]	[mA]	[mA]	[mA]	[A]	[mm]	[mm]	[mm]	°C
B59840B*120yzzz+	6,0	660	330	30	4,1	21,0	17,5	0,6	0/60
B59850B*120yzzz+	10	400	200	26	2,2	17,0	13,5	0,6	0/60
B59860B*120yzzz+	15	280	140	20	1,5	14,5	11,0	0,6	0/60
B59870B*120yzzz+	25	200	100	18	1,0	12,5	9,0	0,6	0/60
B59872x*120yzzz+	35	160	80	18	1,0	12,5	9,0	0,6	0/60
B59873x*120yzzz+	45	140	70	18	1,0	12,5	9,0	0,6	0/60
B59874x*120yzzz+	55	125	60	18	1,0	12,5	9,0	0,6	0/60
B59875x*120yzzz+	65	110	55	18	1,0	12,5	9,0	0,6	0/60
B59880x*120yzzz+	70	110	55	12	0,4	10,0	6,5	0,6	0/60
B59880C*120y5zz+	70	98	65	12	0,4	10,0	6,5	0,6	0/60
B59883x*120yzzz+	120	70	35	10	0,4	10,0	6,5	0,6	0/60
B59883C*120y5zz+	120	75	50	10	0,4	10,0	6,5	0,6	0/60
B59890x*120yzzz+	150	60	30	10	0,2	7,5	4,0	0,5	0/60

[1)] Tolerance ±0,05mm

Table 10:
V_{max} = 265V, T_b = 130°C, th_{max} = 5,0mm

Material number	R_{25}	I_t	I_{nt}	I_{res}	I_{max}	h_{max}	w_{max}	Ød[1)]	Topmin/Topmax
	[Ω]	[mA]	[mA]	[mA]	[A]	[mm]	[mm]	[mm]	°C
B59830B*130yzzz+	5,0	680	450	30	4,1	21,0	17,5	0,8	0/60
B59840B*130yzzz+	9,0	500	330	26	2,2	17,0	13,5	0,6	0/60
B59850B*130yzzz+	13,0	320	200	10	1,5	14,5	11,0	0,6	0/60
B59860x*130yzzz+	25,0	230	140	18	1,0	12,5	9,0	0,6	0/60
B59870x*130yzzz+	50,0	150	100	12	0,4	10,0	6,5	0,6	0/60
B59880x*130yzzz+	160,0	90	55	10	0,2	7,5	4,0	0,6	0/60

1) Tolerance ±0,05mm

Table 11:
V_{max} = 265V, T_b = 135°C, th_{max} = 5,0mm

Material number	R_{25}	I_t	I_{nt}	I_{res}	I_{max}	h_{max}	w_{max}	Ød[1)]	Topmin/Topmax
	[Ω]	[mA]	[mA]	[mA]	[A]	[mm]	[mm]	[mm]	°C
B59841B*135yzzz+	6,0	700	350	30	4,1	21,0	17,5	0,6	0/60
B59851B*135yzzz+	10	445	215	26	2,2	17,0	13,5	0,6	0/60
B59861B*135yzzz+	15	320	150	20	1,5	14,5	11,0	0,6	0/60
B59871B*135yzzz+	25	225	108	18	1,0	12,5	9,0	0,6	0/60
B59881x*135yzzz+	70	120	60	12	0,4	10,0	6,5	0,6	0/60
B59891x*135yzzz+	150	65	30	10	0,2	7,5	4,0	0,5	0/60

1) Tolerance ±0,05mm

Table 12:
V_{max} = 440V, T_b = 120°C, th_{max} =7,5mm

Material number	R_{25}	I_t	I_{nt}	I_{res}	I_{max}	h_{max}	w_{max}	Ød[1)]	Topmin/Topmax
	[Ω]	[mA]	[mA]	[mA]	[A]	[mm]	[mm]	[mm]	°C
B59770x*120yzzz+	70	127	64	7.0	2.8	13,5	9	0,6	0/+60
B59771x*120yzzz+	120	97	49	7.0	2.8	13,5	9	0,6	0/+60
B59772x*120yzzz+	150	86	43	7.0	2.8	13,5	9	0,6	0/+60

1) Tolerance ±0,05mm

Table 13:
V_{max} = 440V, T_b = 120°C, th_{max} = 7,5mm;

Material number	R_{25}	I_t	I_{nt}	I_{res}	I_{max}	h_{max}	w_{max}	Ød[1)]	Topmin/Topmax
	[Ω]	[mA]	[mA]	[mA]	[A]	[mm]	[mm]	[mm]	°C
B59751x*120yzzz+	50	173	87	8.0	4	18,0	13	0,6	0/+60
B59752x*120yzzz+	80	137	69	8.0	4	18,0	13	0,6	0/+60
B59753x*120yzzz+	120	112	56	8.0	4	18,0	13	0,6	0/+60
B59754x*120yzzz+	150	100	50	8.0	4	18,0	13	0,6	0/+60

1) Tolerance ±0,05mm

Table 14:
V_{max} = 550V, T_b = 120°C, th_{max} = 7,5mm

Material number	R_{25}	I_t	I_{nt}	I_{res}	I_{max}	h_{max}	w_{max}	Ød[1)]	Topmin/Topmax
	[Ω]	[mA]	[mA]	[mA]	[A]	[mm]	[mm]	[mm]	°C
B59773x*120yzzz+	500	48	24	7.0	1	13,5	9	0,6	0/+60

[1)] Tolerance ±0,05mm

Table 15:
Vmax = 550V, Tb = 115°C, thmax = 7,5mm

Material number	R_{25}	I_t	I_{nt}	I_{res}	I_{max}	h_{max}	w_{max}	Ød[1)]	Topmin/Topmax
	[Ω]	[mA]	[mA]	[mA]	[A]	[mm]	[mm]	[mm]	°C
B59774x*115yzzz+	1100	32	16	7.0	1	13,5	9	0,6	0/+60
B59755x*115yzzz+	500	55	28	8.0	1.4	18,0	13	0,6	0/+60

[1)] Tolerance ±0,05mm

Table 16:
Vmax = 265V, Tb = 140°C

Material number	R_{25}	I_t	I_{nt}	I_{res}	I_{max}	D	Th	Topmin/Topmax
	[Ω]	[mA]	[mA]	[mA]	[A]	[mm]	[mm]	°C
B59160A*140A*10+	42	160	70	12	1.41	5.0 [1)]	2.6 [2)]	0/+80

[1)] -0,1/+0,2mm
[2)] ±0,15mm

2. INSPECTION REQUIREMENTS

2.1 Procedures

2.1.1 For qualification approval, the procedures shall be in accordance with the generic specification IEC 60738-1, 6.5.4.

3.1.2 For quality conformance inspection the test schedules (tables 1 and 2) include sampling, periodicity severity's and requirements. The formation of inspection lots is covered by 6.5.7 of the generic specification.

In the following tables (item nos. according to the blank detail specification):

1) The Subclause numbers of tests refer to the generic specification IEC 60738-1 and to the data of this specification.

2) Number to be tested: sample size as directly allotted to the code letter for IL in table IIA of IEC 60410 (Single sampling plan for normal inspection).

3) In these tables: p = periodicity in months
n = number of devices in the samples
c = the acceptance criterion (permitted number of non-conforming items)
D = indicates a destructive test
ND = indicates a non destructive test
IL = the inspection level

5) The specimens used for this group may, at the discretion of the manufacturer, be used for any subsequent group which is identified as being „destructive".

6) The soldering – solderability and soldering – resistance to heat tests shall only be applied where the thermister has terminations which are appropriate for soldering.

7) Where the terminations are stated to be suitable for printed wiring applications, the appropriate test conditions in IEC 60068 shall apply.

8) The termistors shall be mounted by their normal means.

9) The bump test and the shock test are alternatives. The test selected in the detail specification shall be used.

10) Mounting for electrical measurements: the thermistors are mounted by their own means in clamps.

11) 100% testing shall be followed by re-inspection by sampling in order to monitor outgoing quality level by non-conforming items per million ($x10^{-6}$). The sampling level shall be established by the manufacturer. For the calculation of $x\ 10^{-6}$ values any parametric failure shall be counted as non-conforming item. In case one or more non-conforming items occur in a sample, this lot shall be rejected.

TEST SCHEDULE for quality conformance inspection: lot-by-lot

Subclause number and test (see list item 1)	D or ND	Conditions of test (see list item 1)	IL	n	c	Performance requirements (see list item 1)
			(see list item 3)			
GROUP A INSPECTION **Subgroup A0** 7.5 Zero-power resistance R_T	ND	@25°C ±1°C, <1.5V DC	100 % (see list item 12)			According par. 1.8
Subgroup A1 7.4.1 Visual examination	ND		S-4	2)	0	As in 7.4.1
Subgroup A2 7.4.2 Marking 7.4.3 Dimensions (gauging)	ND	Not applicable for B59160A*140A*10 Not applicable	S-3	2)	0	As in 7.4.2
GROUP B INSPECTION **Subgroup B1** 7.25 Tripping current 7.27 Residual current 7.26 Maximum non-tripping current	ND	T ≤ 25°C I_t: acc. to detail specification $t_{s\ max}$: 600s T ≤ 25°C T = (25±1)°C $I_{nt\ max}$: acc. to detail specification	S-2	2)	0	According par. 1.8 According par. 1.8 According par. 1.8
Subgroup B2 7.8 Voltage proof 7.16 Soldering - Solderability	ND	Not applicable IEC 60068-2-20 Test Ta: soldering bath conditions: - for leaded solder: 235±5°C, 2s - for lead free solder: 245±5°C, 3s Not applicable for B59160A*140A*10	S-2	2)	0	The terminations shall be uniformly tinned

TEST SCHEDULE for quality conformance inspection: periodic

Subclause number and test (see list item 1)	D or ND	Conditions of test (see list item 1)	Sample size and acceptance criterion (see list item 3) P	N	c	Performance Requirements (see list item 1)
GROUP C INSPECTION						
Subgroup C1A	D	(see list item 6 and 7)	6	5	0	
Part of sample						
7.17 Soldering – resistance to soldering heat		IEC 60068-2-20 Test Tb: soldering bath 260°C soldering time: 10s Visual examination Zero-power resistance Temperature: 25°C ±1°C Voltage: <1.5V DC Not applicable for B59160A*140A*10				As in 7.17 ΔR/R: ±5%
7.15 Robustness of terminations		IEC 60068-2-21 Tensile: Ua 5N / 10 N (d < 0.5mm = 5N d > 0.5mm = 10N) Bending: Ub 2.5N / 5N (d < 0.5mm = 2.5N d > 0.5mm = 5N) - Torsion strength Uc (Methode1/ Severity 2): 2x 180° Visual examination Zero-power resistance Temperature: 25°C ±1°C Voltage: <1.5V DC Not applicable for B59160A*140A*10				As in 7.15 ΔR/R: ±5%
Subgroup C1B	D		6	5		
Other part of sample						
7.18 Rapid change of temperature		IEC 60068-2-14; Na θ_A = -40°C θ_B = 125°C 5 cycles; t=30min Visual examination Zero-power resistance Temperature: 25°C ±1°C Voltage: <1.5V DC				As in 7.18 ΔR/R: ±10%

TEST SCHEDULE for quality conformance inspection: periodic

Subclause number and test (see list item 1)	D or ND	Conditions of test (see list item 1)	Sample size and acceptance criterion (see list item 3) P	N	c	Performance Requirements (see list item 1)
7.19 Vibration		IEC 60068-2-6 Frequency range: 10-55Hz Amplitude: 0.75 mm Sweep endurance: Total duration 6h (2h in x,y,z) Final measurements: Visual examination Zero-power resistance Temperature: 25°C ±1°C Voltage: <1.5V DC Not applicable for B59160A*140A*10				As in 7.19 ΔR/R: ±5%
7.20 Bump (or shock, see list item 9)		Not specified				
7.21 Shock (or bump, see list item 9)		(see list item 8) IEC 60068-2-27 Acceleration: 500 m/s2; t =11ms Number of shocks: 6 x 3 pulses Visual examination Zero-power resistance Temperature: 25°C ±1°C Voltage: <1.5V DC Not applicable for B59160A*140A*10				As in 7.21 ΔR/R: ±5%
Subgroup C1 Combined sample of specimens of subgroups C1A and C1B	D		6	10		
7.22 Climatic sequence		IEC 60068-2-30 Db, IEC60068-2-1 A, IEC 60068-2-2 B (low air pressure test not applicable) Category: -40/125/56 - Dry heat: T = 125±2°C, t = 16h - Damp heat, cyclic, first cycle - Cold: T = -40±2°C, t = 2h - Damp heat, cyclic, remaining 5 cycles Visual examination Zero-power resistance Temperature: 25°C ±1°C Voltage: <1.5V DC				As in 7.22 ΔR/R: ±10%

TEST SCHEDULE for quality conformance inspection: periodic

Subclause number and test (see list item 1)	**D or ND**	**Conditions of test** (see list item 1)	**Sample size and acceptance criterion** (see list item 3) P	N	c	**Performance Requirements** (see list item 1)
Subgroup C3	ND		6	10	0	
7.4.4 Dimensions (detail)		(see list item 5)				According par. 1.2
Subgroup C5	ND		6	10	0	
7.24.3 Endurance at maximum operating temperature and maximum voltage		Temperature: T = T_{op_max} ±2°C V = V_{max} Duration: 1000h				
		Examination at 168 h and 500 h Zero-power resistance Temperature: 25°C ±1°C Voltage: <1.5V DC				∆R/R: ±25%
		Examination at 1000 h				As in 7.24.3
		Visual examination Zero-power resistance Temperature: 25°C ±1°C Voltage: <1.5V DC				∆R/R: ±25%
		Residual current Temperature: 25°C ±1°C				According par. 1.8

TEST SCHEDULE for quality conformance inspection: periodic

Subclause number and test (see list item 1)	D or ND	Conditions of test (see list item 1)	Sample size and acceptance criterion (see list item 3) P	N	c	Performance Requirements (see list item 1)
GROUP D INSPECTION **Subgroup D1** 7.24.1 Endurance at room temperature (cycling)	D	(see list item 10) Duration: 100 cycles Applied voltage: V_{max} and I_{max} In accordance with El. Data **B59160A*140A*10 the duration is 30000 cycles** Final measurements: Visual examination Zero-power resistance Temperature: 25°C ±1°C Voltage: <1.5V DC Residual current Temperature: 25°C ±1°C	12	10	0	As in 7.24.1 ΔR/R: ±10% **B59160A*140A*10: ΔR/R: ±25%** According par. 1.8
Subgroup D2 7.24.4 Cold environmental electrical cycling	D	Mounting according item par. 2, 10) B59160A*140A*10 clamped Duration: 1000 cycles Applied voltage: V_{max} and I > I_t T = T_{op_min} ±2°C Final measurements: Visual examination Zero-power resistance at Temperature: @25°C ±1°C, <1.5V DC	12	10	0	As in 7.24.4 ΔR/R: ±25%
Subgroup D3 7.24.5 Thermal runaway	D	Mounting according item par. 2, 10) B59160A*140A*10 clamped Applied voltage: 200% V_{max} Starting with V_{max} and increase 10%V_{max}, d = 2min/step Final measurements: Visual examination	12	10	0	As in 7.24.5
Subgroup D4 7.23 Damp heat, steady state	D	IEC 60068-2-78 test Ca Voltage: 0V Temperature: 40°C ±2°C Humidity: 93% RH +2 –3%RH Duration: 56d Visual examination Zero-power resistance Temperature: 25°C ±1°C Voltage: <1.5V DC	12	10	0	As in 7.23 ΔR/R: ±10%

Appendix: Customer specific types

TDK provides in close cooperation with its customers also specific solutions which are not available to the public. The relevant specification is a data sheet or customer specification which is exchanged between our customer and **TDK**.

The following types are derived from a reference type, tables 1-**16** of this specification, with customer specific differences outlined below.

B59056U1135B51
Reference type: B59881x*135yzzz+; packing specific for the customer, all other parameters of this specification are the same as for the reference type

B59861C1120A70

V_{max} = 265V, T_b = 120°C, th_{max} = 6,0mm

Type	R_{25}	I_t	I_{nt}	I_{res_typ}	I_{res_max}	I_{max}	h_{max}	w_{max}	Ød[1)]	Topmnin /Topmax
	[Ω]	[mA]	[mA]	[mA]	[mA]	[A]	[mm]	[mm]	[mm]	°C
B59861C1*	20	340	160	11	22	1,5	14,5	11,0	0,6	0/60

[1)] Tolerance ±0,05mm

ΔR_{25} = ± 25%