Specification available from: Österreichischer Verband für Elektrotechnik (ÖVE) A-1010 Wien, Eschenbachgasse 9	**IEC 61051-2-2 AT0006** Issue 1 / 2019-03
Electronic components of assessed quality in accordance with: IEC 61051-1: 2007-04 IEC 61051-2: 1991-01 IEC 61051-2 Amendment 1: 2009-05	*IEC 61051-2: 1991-01*
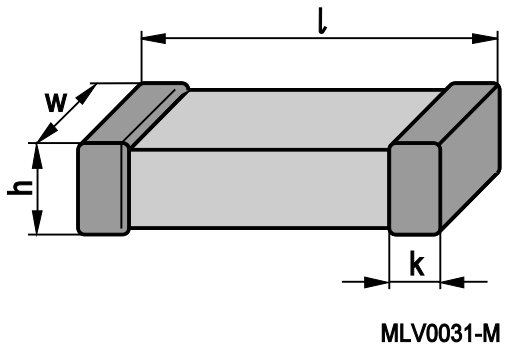	**ZINC OXIDE SURGE SUPPRESSION VARISTORS** Multilayer Varistors High Surge CT Series (**C**hip with **t**hree-layer-termination (Ag/Ni/Sn)) Multilayer Varistors High Surge CN Series (**C**hip **n**ot molded, with two-layer-termination(Ag/Pt))
	Non insulated
	Assessment level: E

NOTES

1 - The undimensioned details do not affect the performance of the device.
2 - The terminations are suitable for soldering.
3 - The terminations are suitable for printing wired applications.
4 - The terminations are rigid.

Information on the availability of components
qualified to this detail specification is given
in the Qualified Products List.

SECTION ONE – GENERAL DATA

1 General data

1.1 Recommended Method(s) of mounting

If not specified otherwise, the SMD Varistors shall be reflow-soldered on FR4 test boards (recommend reflow curve profile according to IEC60068-2-58, test Td2, Tpeak = 235°C - 260°C).

1.2 Dimensions, ratings and characteristics

1.2.1 Dimensions (All dimensions are in millimeters)

- Body length: l see table below
- Body width: w see table below
- Body thickness: h see table below
- Thickness of terminations: k see table below

Chip size	Vrms, max (V)	l (mm)	w (mm)	h (mm)	k(mm)
CN2220	60	5.5-6.0	4.9±0.30	3.0 max	0.4…1.0

1.2.2 Ratings and characteristics

Climatic category:	40/125/56
LCT/UCT (Lower/Upper category temperature) [1)]	-40°C/125°C
Maximum continuous a.c. voltage:	see table below
Maximum continuos d.c. voltage:	see table below
Supply voltage:	see table below
Voltage at specified current (1 mA)/Maximum Current at Vdc,max:	
- at 25°C	see table below
- if applicable, at upper category temperature:	-
- if applicable, at ... °C	-
Maximum peak current:	
- for 10 pulses 8/20 µs at 2 per min:	see table below
- for 10 pulses 10/1000 µs at 1 every two min:	see table below
Class current:	see table below
Voltage at class current (protection level), Vclamp,max:	see table below
Capacitance:	see table below
Maximum temperature coefficient of the voltage at specified current	Not specified

Style (1) /Material number	Maximum continuous voltage		Voltage at 1 mA @T_{amb}	Ileak max @Vdc,max	Vclamp,max Voltage at class current (8/20µs)		Max. peak current 8/20µs, 1 time	Max. peak current 8/20µs, 10 time	Max. peak current 10/1000µs 1 time	Max. peak current 10/1000µs 10 time	Max. C @1kHz, 1 V
	r.m.s. (V)	d.c. (V)	(V)	(µA)	Class current (A)	Max. volt (V)	(A)	(A)	(A)	(A)	(pF)
CN2220K60E3GK2_U/ B72542U2600K62V9	60	85	90-110	70	100	170	4500	3000	85	53	8000

(1) For explanation of style reference number, see clause 1.5.

1.2.3 Derating curve

Maximum continuous a.c. or d.c. voltage with temperature.

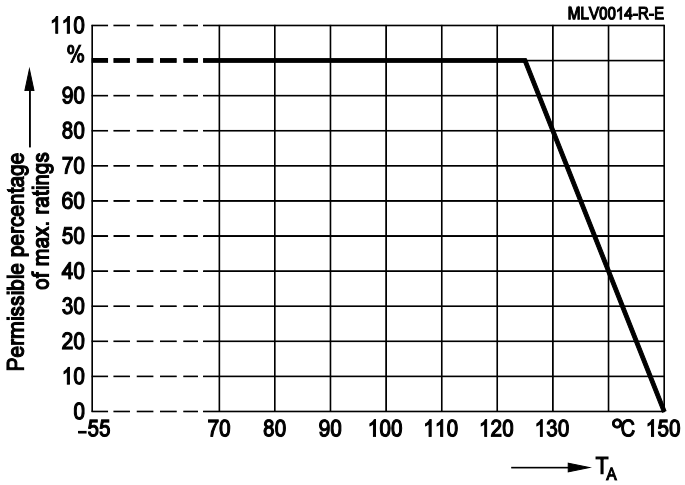

1.3 Related documents

Generic specification:	IEC Publication 61051-1: Varistors for Use in Electronic Equipment. Part 1: Generic Specification.
Sectional specification:	IEC Publication 61051-2: Varistors for Use in Electronic Equipment. Part 2: Sectional Specification for Surge Suppression Varistors.

1.4 Marking

None.

1.5 Ordering information

Orders for varistors covered by this specification shall contain, in clear or in coded form, the following minimum information

Example CN 2220 60 E 2 G* K2 U

CN	Series code.
2220	Chip size
K	Varistor voltage tolerance at 1 mA: K: ± 10 %
60	Max. continuous r.m.s. voltage
E2/E3	Increased energy handling capability/low clamping voltage
G	Taping, packing options (not effecting IEC specifications).
K2	Termination material (CN types only)
U	Customer specific version

1.6 Certified records or released lots

Not required.

1.7 Additional information (not for inspection purposes)

The voltage indicated on the component is the maximum allowable steady state sinusoidal voltage at 50 - 60 Hz. When use is made of a supply voltage, the maximum continuous a.c. r.m.s. voltage = 1.1 x supply voltage. Should the varistor be subjected to voltage above the indicated voltage, it may fail by package rupture or expulsion material, causing a major problem in the equipment.

Coating information: Not applicable.

1.8 Additional or increased severities or requirements to those specified in the generic and/or sectional specification

None.

SECTION TWO – INSPECTION REQUIREMENTS

2 Inspection requirements

2.1 Procedures

2.1.1 For Qualification Approval the procedure shall be in accordance with the Sectional Specification, IEC Publication 61051-2, Sub-clause 3.2.

2.1.2 For Quality Conformance Inspection the test schedule (Table II) includes sampling, periodicity, severities and requirements. The formation of inspection lots is covered by Sub-clause 3.3.1 of the Sectional Specification.

TABLE II

Notes

1. - Sub-clause numbers of tests and performance requirements refer to the Generic Specification, IEC Publication 61051-1.
2. - Inspection Levels and AQL's are selected from IEC Publication 61193-2 Sampling Plans and Procedures for Inspection by Attributes.
3. - In this table:
   - p = periodicity (in months)
   - n = sample size
   - c = acceptance criterion (permitted number of defectives)
   - D = destructive
   - ND = non-destructive
   - IL = inspection level
   - AQL = acceptable quality limit

   } IEC 61193-2
4. - The bump test and shock test are considered to be alternative. The detail specification shall indicate which test is to be performed.
5. - Where d.c. has been applied to the varistor, the reference voltage shall be measured in the same direction.
6. The manufacturer shall only be required to perform one of these tests

Sub-clause number and Test (see Note 1)	D or ND	Conditions of test (see Note 1)	IL (see Note 2)	AQL (see Note 2)	Performance requirements (see Note 1)
<u>GROUP A INSPECTION</u> (lot-by-lot)					
<u>Sub-group A1</u>	ND		II	1,0%	
4.4.1 Visual examination					As in 4.4.1
4.4.2 Marking		Not applicable			
<u>Sub-group A2</u>	ND		II	0,65 %	
4.5 Voltage		Voltage at specified current			As specified in 1.2.2
<u>Sub-group A3</u>	ND		S-4	1,0%	
4.4.3 Dimensions (gauging)		Note: Gauging not applicable. Measuring dimensions: l, w, h			As specified in 1.2.2
<u>GROUP B INSPECTION</u> (lot-by-lot)					
<u>Sub-group B1</u>	D		S-3	2,5%	
4.11 Robustness of terminations		Substrate bending test IEC 60068-2-21,Test Ue1 d = 2 mm, t = 60 s Visual examination Voltage at specified current			No visible damage $\left\lvert \frac{\Delta U}{U} \right\rvert \leq 10\%$
		Shear test IEC 60068-2-21,Test Ue3 Force F = 5 N, t = 10 ± 1 s. Visual examination Voltage at specified current			No visible damage $\left\lvert \frac{\Delta U}{U} \right\rvert \leq 10\%$
4.13 Solderability		IEC 60068-2-58, test Td1 Method: Reflow soldering, Sn96,5Ag3Cu,5, T = 235 ± 3 °C, t = 10 **± 5s** Visual examination			The terminations shall be uniformly tinned.
4.22 Solvent resistance of the marking		Not applicable			
<u>Sub-group B2</u>			S-2	1,0%	
4.7 Voltage under pulse condition		Voltage at class current: Vclamp,max See **1.2.2**			As specified in the detail specification
4.9 Voltage proof		Not applicable.			

Sub-clause number and Test (see Note 1)	D or ND	Conditions of test (see Note 1)	Sample size & criterion of acceptability (see Note 3) p	n	c	Performance requirements (see Note 1)
<u>GROUP C INSPECTION</u> (periodic)						
<u>Sub-group C1</u>	D		6	13	1	
4.6 Pulse current		<u>Pulse current</u> 10 pulses 8/20 µs at 2 per min in one direction (current according 1.2.2 and 1.2.3) Visual examination Voltage at specified current				No visible damage $\left\lvert \frac{\Delta U}{U} \right\rvert \leq 10\%$
<u>Sub-group C2</u>	D		12	13	1	
4.6 Pulse current		10 pulses 10/1000µs in one direction, 1 every 2 min, at the maximum peak current defined for 10 pulses Visual examination Voltage at specified current				No visible damage $\left\lvert \frac{\Delta U}{U} \right\rvert \leq 10\%$
<u>Sub-group C3A</u> Part of sample of Sub-group C3			12	7		
4.8 Capacitance		f = 1 kHz Signal level ≤ 1V Zero bias				As specified in 1.2.2 of this specification
4.12 Resistance to soldering heat		IEC 60068-2-58, test Td2, Method1: Solder bath, Sn96,5Ag3Cu,5 T = 260±5°C, d = 10±1s Visual examination Voltage at specified current				No visible damage $\left\lvert \frac{\Delta U}{U} \right\rvert \leq 5\%$
4.23 Component solvent resistance of the marking		Not applicable.				
4.14 Rapid change of temperature		IEC 60068-2-14,Test Na N = 5 cycles, d = 30 min θ_A = -40 ± 3°C θ_B = 125 ± 2°C Visual examination Voltage at specified current				No visible damage $\left\lvert \frac{\Delta U}{U} \right\rvert \leq 5\%$

Sub-clause number and Test (see Note 1)	D or ND	Conditions of test (see Note 1)	Sample size & criterion of acceptability (see Note 3) p	n	c	Performance requirements (see Note 1)
			12	6		
<u>Sub-group C3B</u> Other part of sample of Sub-group C3						
4.16 Shock (or bump, see Note 4)		Not specified.				
4.15 Bump (or shock, see Note 4)		IEC 60068-2-27, Ea Pulse shape: half sine. a = 490 m/s², d = 11 ms N = 6 x 5000 shocks.				
		Visual examination Voltage at specified current				No visible damage $\left\lvert \frac{\Delta U}{U} \right\rvert \leq 5\%$
4.17 Vibration		IEC 60068-2-6,Test Fc, Method B4 Frequency range: 10 Hz to 55 Hz a = 0,75 mm or 98 m/s^2 (whichever is the less) d = 3x2 h				
		Visual examination Voltage at specified current				No visible damage $\left\lvert \frac{\Delta U}{U} \right\rvert \leq 5\%$

Sub-clause number and Test (see Note 1)	D or ND	Conditions of test (see Note 1)	Sample size & criterion of acceptability (see Note 3) p	n	c	Performance requirements (see Note 1)
<u>Sub-group C3</u> Combined sample of specimens of Sub-groups C3A and C3B 4.18 Climatic sequence - Dry heat - Damp heat, cyclic, Test Db, first cycle - Cold - Damp heat, cyclic, Test Db, remaining 5 cycles - Final measurement	D	(Low air pressure test not applicable) IEC 60068-2-2,Test Ba 16 ± 2h, T = 125 ± 2°C; IEC 60068-2-30,Test Db 24h, T = 55 ± 2°C; IEC 60068-2-1,Test Aa 2h, T = -40 ± 3°C; IEC 60068-2-30,Test Db 24h, T = 55 ± 2°C; Visual examination Voltage at specified current	12	13	1	No visible damage $\left\lvert \frac{\Delta U}{U} \right\rvert \leq 10\%$
<u>Sub-group C4</u> 4.21 Endurance at upper category temperature 4.7 Voltage under pulse condition	D	T = 125 ± 2°C, Duration: 1000 h V = Max. continuous d.c. voltage. See table 1. Examination at 48 h, 500 h and 1000 h: Visual examination Voltage at specified current Examination after test: Voltage at class current: Vclamp,max				No visible damage $\left\lvert \frac{\Delta U}{U} \right\rvert \leq 10\%$ <1,1 x Vclamp,max acc. to 1.2.2

Sub-clause number and Test (see Note 1)	D or ND	Conditions of test (see Note 1)	Sample size & criterion of acceptability (see Note 3) p	n	c	Performance requirements (see Note 1)
<u>GROUP D INSPECTION</u> <u>Sub-group D1</u> 4.19 Damp heat, steady state	D	IEC 60068-2-78, Test Ca T = 40 ± 2°C, RH = 93(+2/-3)%, 56d. <u>4 specimens</u>: No voltage applied <u>Other 4 specimens</u>: Applied voltage: 10% of the max. d.c. voltage Visual examination Voltage at specified current	24	8	1	No visible damage $\left\lvert \frac{\Delta U}{U} \right\rvert \leq 10\%$
<u>Sub-group D2</u> 4.4.4 Dimensions (detail) 4.5 Voltage (if applicable)	ND	Measuring dimensions: l, w, h, k Uv at specified current Ileak,max @ Vdc,max At following temperatures: 25°C				As specified in 1.2.1 As specified in 1.2.2
<u>Sub-group D3</u> 4.20 Fire hazard (Needle flame test)	D	Not specified for MLV.	24	5	0	